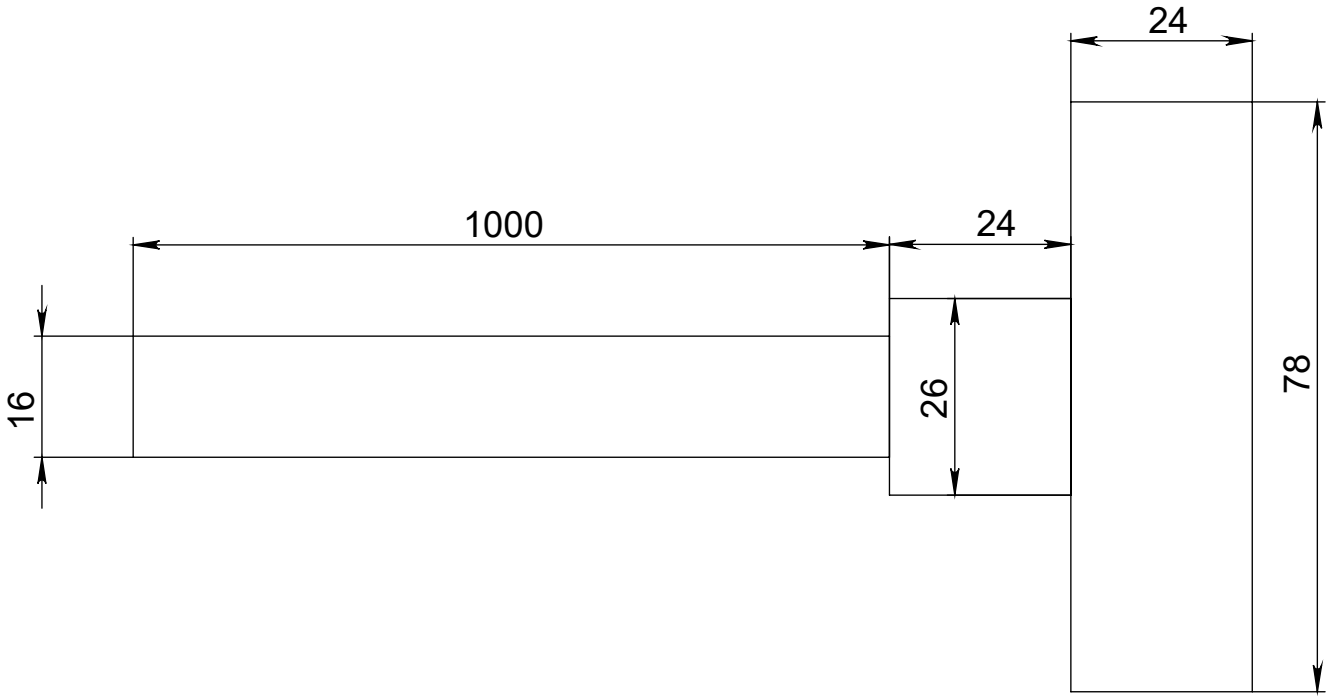
24
1000
24
16
26
78

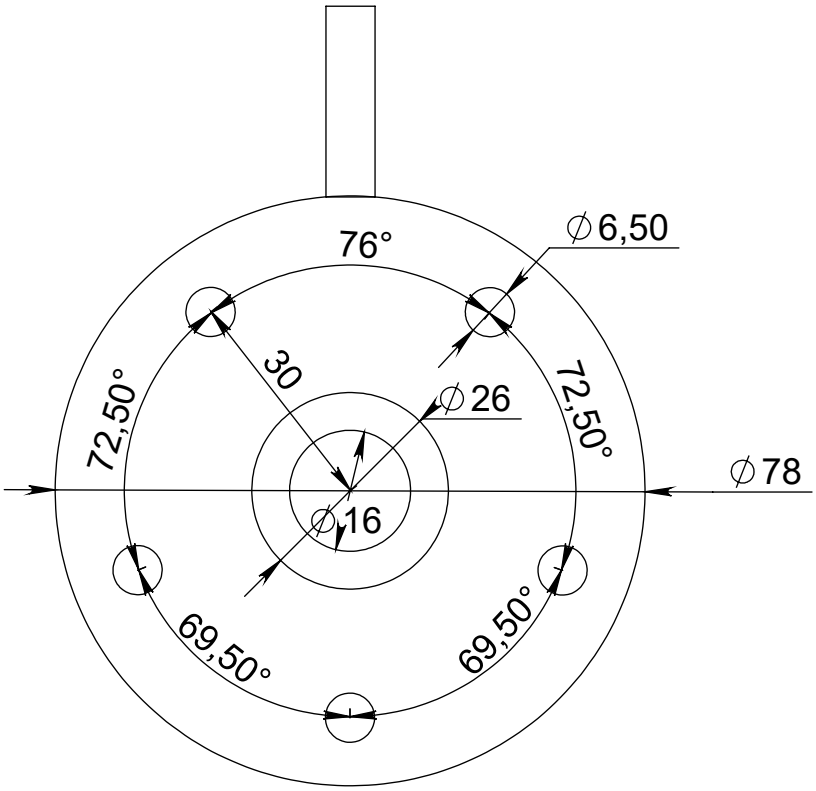
76°
∅6,50
30
∅26
72,50°
72,50°
∅78
∅16
69,50°
69,50°